TG

DESCRIPTION

A general purpose industrial transducer suitable for a wide range of applications. Our TG series is available in either 0.5% or 0.25% accuracy. It utilizes difused silicone and strain gauge technologies.

FEATURES

- Vacuum and pressure ranges
- Temperature Compensation
- Voltage and current ouptu models available

APPLICATIONS

- Industrial Equipment
- Safety Monitoring
- Mobile Equipment

Specifications

Accuracy	0.5% FS, 0.25% FS
Pressure Range	Vacuum to 10,000 psi (700 Bar)
Proof Pressure	150% FS
Burst Pressure	300% FS
Protection	DIN 43650A (18 mm): IP65 DIN 43650C (9.4 mm) : IP65 M12 Connector: IP67 Cable: IP67
Fatigue Life	100,000,000 cycle
Long Term Drift	0.1%/FS/year for < 725 PSI (50 BAR) 0.2%/FS/year for ≥ 725 PSI (50 BAR)
Thermal Error	0.02%/FS/°C
Compensated Temperature	32°F to 149°F (0°C to 65°C)
Operating Temperature Range	-4°F to 176°F (-20°C to 80°C)
Storage Temperature Rating	-40°F to 257°F (-40°C to 125°C)
Process Connection	Standard: SS304 Optional: SS316
Vibration	10g (20-2000Hz) for ≤ 58 PSI (4 BAR) 20g (20-500Hz) for ranges >58 PSI (4BAR)
Shock	100g (11ms)
Supply Voltage	Output / Supply 4 - 20mA / 12 - 32 VDC 0 - 5V / 12 - 36 VDC 0 - 10V / 12 - 36 VDC 0.5 - 4.5V (ratiometric) / 4.5 - 5.5 VDC 0.5 - 4.5V / 12 - 36 VDC *** Other supply voltage available upon request**
Max Loop Resistance	500 Ω
Weight	0.37 lbs (0.170kg)

Dimensions

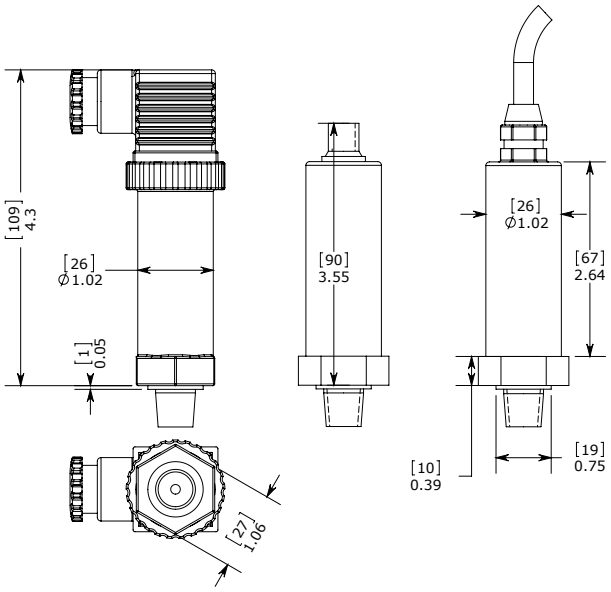

HC DIN 43650A | M12 | CABLE

Wiring Code

Connector	Output				
	4 - 20 mA		Voltage		
	Supply +	Supply -	Supply +	Common	Output +
M2	1	2	1	3	2
M12	1	3	1	4	3
C79 / C158	Red	Black	Red	Yellow/White	Blue
HC	1	2	1	3	2

TG

ANFIELD SENSORS INC.

Ordering Information

	1		2		3		4		5		6
Example	TG	-	0300P	-	G	-	3	-	HC	-	4M	-	A2

1 - Measuring Range:

Code	Description
1V0B	-1 BAR to 0 BAR (only available in gauge reference)
1V1B	-1 BAR to 1 BAR (only available in compound reference)
001B	1 BAR
002B	2 BAR
005B	5 BAR
010B	10 BAR
020B	20 BAR
050B	50 BAR
100B	100 BAR
200B	200 BAR
350B	350 BAR
400B	400 BAR
600B	600 BAR
700B	700 BAR

OR

Code	Description
1V0P	-30 inHg to 0 inHg (only available in gauge reference)
1V15P	-30 inHg to 15 PSI (only available in compound reference)
0015P	15 PSI
0030P	30 PSI
0060P	60 PSI
0100P	100 PSI
0150P	150 PSI
0200P	200 PSI
0300P	300 PSI
0500P	500 PSI
0600P	600 PSI
0750P	750 PSI
1000P	1000 PSI
1500P	1500 PSI
2000P	2000 PSI
3000P	3000 PSI
5000P	5000 PSI
6000P	6000 PSI
7500P	7500 PSI
10000P	10000 PSI

Note: Other ranges available.
Please consult factory.

2 - Gauge Standard:

- **A** - Absolute
- **G** - Gauge
- **C** - Compound

3 - Output:

- **2** - 4 -20 mA, (2 wire)
- **3** - 0 - 10 V, (3 wire)
- **4** - 0.5 - 4.5 V (Ratiometric)
- **5** - 0 - 5.0 V, (3 wire)
- **7** - 0.5 - 4.5 V, (wire)

4 - Electrical Connection:

- **M2** - DIN 43650C
- **HC** - DIN 43650A
- **HCC79** - DIN 43650A - with 79 inches (2 meters) of cable
- **M12** - M12, 4 pin
- **C79** - Shielded Cable, 79 inches (2 meters)
- **C158** - Shielded Cable, 158 inches(4 meters)

5 - Process Connection

- **4M** - 1/4" NPT male
- **4G** - 1/4" BSPP male, G1/4, with Viton profile seal
- **4S** - 7/16-20 SAE male, with Viton O-ring seal

6 - Accuracy

- **A2** - 0.5%
- **A3** - 0.25%

Note: Please see page 60 for other available options